MAGNETIC
Normal Power Factor

SS16550AP

Ballast Type:	Electromagnetic
Input Voltage:	120VAC+5%,-10%
Input Frequency:	60 Hz.

Starting Method:	Preheat Self Start
Lamp Connection:	Series
Unit Weight	3.50 lb.

ELECTRICAL SPECIFICATION:

Line Voltage (V)	Lamp Type	Approx. Lamp Length	Lamp Watts (W)	No. of Lamps	Line Current (A)	Input Power (W)	Power Factor	Max Current THD (%)	Current Crest Factor	Wiring Diagram	B.E.F.
120	GPH383T5	15"	18	1	0.87	32	≥0.30	≤30	≤1.7	006	/
120	GPH406T5	16"	19	1	0.87	30	≥0.30	≤30	≤1.7	006	/
120	GPH436T5	17"	21	1	0.86	31	≥0.31	≤28	≤1.7	006	/
120	GPH450T5	18"	22	1	0.86	31	≥0.31	≤28	≤1.7	006	/
120	GPH508T5	20"	24	1	0.85	32	≥0.32	≤30	≤1.7	006	/
120	GPH540T5	21"	26	1	0.83	33	≥0.32	≤28	≤1.7	006	/

PERFORMANCE:
- Electromagnetic lag type self start ballast
- Series operation
- Normal power factor
- Encased & potted
- Sound Rated A
- Meets ANSI standard C82.1

APPLICATION:
- Maximum case temperature: 194ºF/90ºC
- Maximum ambient temperature: 140ºF/60ºC
- Minimum starting temperature: 50ºF/10ºC
- Lamp starts: >6,000 starts
- Remote mounting: 10ft.

SAFETY:
- UL/935 (Class P, Type HL, Type 1 outdoor) listed
- CSA/C22.2 certified
- Automatic reset thermal protector
- No PCB's

STYLE:

10

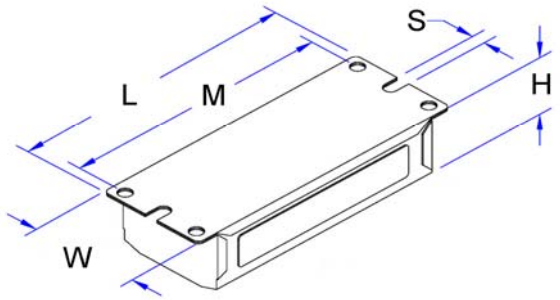

H	W	L	M	S
1 11/16	2 3/8	6 9/16	6	5/16
1.69	2.38	6.56	6.00	0.31
2.71 cm	6.03 cm	16.66 cm	15.24 cm	0.79 cm

WIRING DIAGRAM:

006

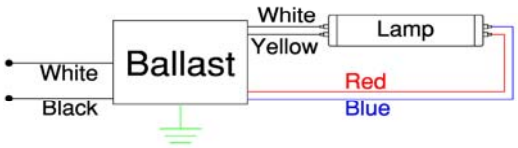

Standard lead lengths:
- Blk: 15"
- Wht: 15"
- Blu: 18 "
- Red: 18"
- Yel: 18 "
- Wht: 18 "

* 3/8" Strip

WARRANTY

Robertson Worldwide warrants to the purchaser that this ballast will be free from defects in material or workmanship for a period of 2 years from date of manufacture when properly installed and under normal conditions of use. For more information on Robertson Worldwide's ballasts, call 1-800-323-5633 or visit www.robertsonww.com. Specifications subject to change without notice.

Revised 12/29/04

ROBERTSON WORLDWIDE
13611 Thornton Rd, Blue Island, IL 60406, TEL: 1-800-323-5633, FAX: 1-877-388-2420, www.robertsonww.com