MAGNETIC
Normal Power Factor

SN28P

Ballast Type:	Electromagnetic	Starting Method:	Preheat	Unit Weight:	2.0 lb.
Input Voltage:	120VAC +5%,-10%	Lamp Connection:	N/A	Carton Quantity:	20
Input Frequency:	60 Hz.	Unit Color:	Black	Skid Quantity:	1080

ELECTRICAL SPECIFICATION:

Line Voltage (V)	Lamp Type	Lamp Watts	No. of Lamps	Line Current (A)	Input Power (W)	Power Factor	Max Current THD (%)	Current Crest Factor	Ballast Factor	Wiring Diagram
120	CFQ26W/G24d, CFTR26W/GX24d	26	1	0.59	32	≥0.45	≤10	≤1.6	0.90	102

PERFORMANCE:
- Electromagnetic lag type ballast
- Preheat start
- Normal power factor
- Sound rated A
- Encased & potted
- Meets ANSI C82.1

APPLICATION:
- Maximum case temperature: 194ºF/90ºC
- Maximum ambient temperature: 104ºF/40ºC
- Minimum starting temperature: 25ºF/-4ºC
- Remote mounting: 10 ft.

SAFETY:
- UL listed (Class P, Type HL, Type 1 outdoor)
- CSA certified (cUL)
- Automatic reset thermal protector
- No PCB's

STYLE:

9

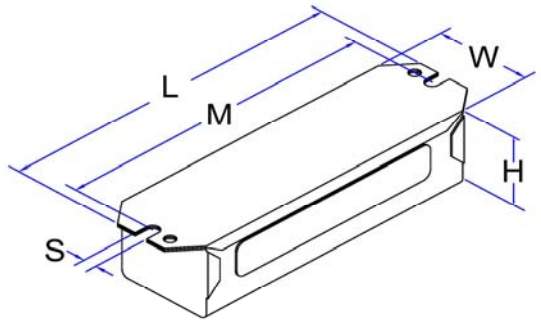

H	W	L	M	S
1 13/32	1 29/32	6 7/16	6	1/4
1.41	1.91	6.44	6.00	0.25
3.58cm	4.85cm	16.36cm	15.24cm	0.64cm

WIRING DIAGRAM:

102

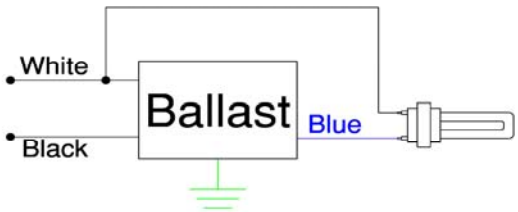

Standard lead lengths:
- Blk: 9"
- Blu: 27"
- Wht: 9"

* 3/8" Strip

WARRANTY

Robertson Worldwide warrants to the purchaser that this ballast will be free from defects in material or workmanship for a period of 2 years from date of manufacture when properly installed and under normal conditions of use. For more information on Robertson Worldwide's ballasts, call 1-800-323-5633 or visit www.robertsonww.com.

Revised 9/5/08

ROBERTSON WORLDWIDE
13611 Thornton Rd, Blue Island, IL 60406, TEL: 1-800-323-5633, FAX: 1-877-388-2420, www.robertsonww.com