MAGNETIC
Normal Power Factor

SEN13PSC

Ballast Type:	Electromagnetic	Starting Method:	Electronic start	Unit Weight:	0.90 lb.
Input Voltage:	120VAC+5%,-10%	Lamp Connection:	Parallel	Carton Quantity:	30
Input Frequency:	60 Hz.	Unit Color:	Black	Skid Quantity:	1800

ELECTRICAL SPECIFICATION:

Line Voltage (V)	Lamp Type	Lamp Watts	No. of Lamps	Line Current (A)	Input Power (W)	Power Factor	Max Current THD (%)	Current Crest Factor	Ballast Factor	Wiring Diagram	B.E.F.
120	F13T5	13	1	0.16	14	≥0.75	≤30	≤1.7	0.80	027	5.71
120	F8T5	8	1	0.17	10	≥0.50	≤20	≤1.7	0.97	027	9.70

PERFORMANCE:
- Electromagnetic lead type ballast
- Electronic start
- Parallel operation
- Normal power factor
- Encased & potted
- Sound rated A
- Meets ANSI C82.1

APPLICATION:
- Maximum case temperature: 194ºF/90ºC
- Maximum ambient temperature: 104ºF/40ºC
- Minimum starting temperature: 50ºF/10ºC
- Remote mounting: 10ft.

SAFETY:
- UL/935 (Class P, Type HL, Type 1 outdoor) listed
- CSA certified (cUL)
- Automatic reset thermal protector
- No PCB's

STYLE:

9AWC

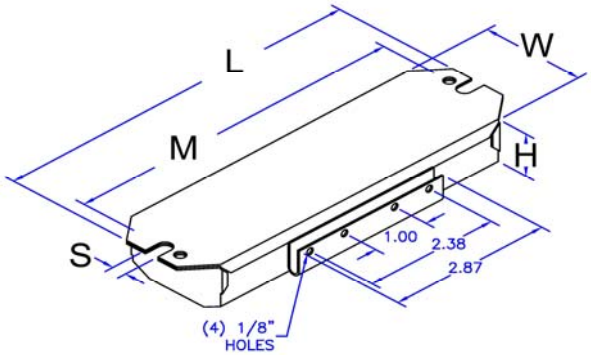

H	W	L	M	S
31/32	1 29/32	6 7/16	6	1/4
0.97	1.91	6.44	6.00	0.25
2.46 cm	4.85 cm	16.36 cm	15.24 cm	0.64 cm

WIRING DIAGRAM:

027

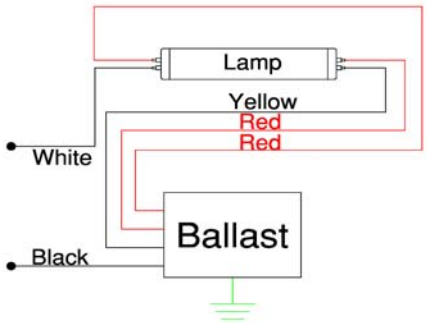

Standard lead lengths:
- Blk: 15"
- Yel: 15"
- Red: (2) 15"

* 3/8" Strip

WARRANTY

Robertson Worldwide warrants to the purchaser that this ballast will be free from defects in material or workmanship for a period of 2 years from date of manufacture when properly installed and under normal conditions of use. For more information on Robertson Worldwide's ballasts, call 1-800-323-5633 or visit www.robertsonww.com. Specifications subject to change without notice.

Revised 9/11/07

ROBERTSON WORLDWIDE
13611 Thornton Rd, Blue Island, IL 60406, TEL: 1-800-323-5633, FAX: 1-877-388-2420, www.robertsonww.com