Robertson WORLDWIDE®
INNOVATIVE LIGHTING SOLUTIONS

S7927RC

Ballast Type:	Electromagnetic	Starting Method:	Preheat Start	Unit Color:	White
Input Voltage:	277VAC +5%, -10%	Lamp Connection:	Series	Unit Weight:	0.89 lbs.
Input Frequency:	60Hz				

ELECTRICAL SPECIFICATIONS:

Line Voltage (V)	Lamp Type	Lamp Watts	No. of Lamps	Line Current (A)	Input Power (W)	Power Factor	Max Current THD (%)	Current Crest Factor	Ballast Factor	Wiring Diagram
277	CFT9W/G23* CFQ9W/G23	9	1	0.17	13	≥ 0.30	≤ 15	≤ 1.7	0.90	101
277	CFT7W/G23	7	1	0.18	12	≥ 0.25	≤ 15	≤ 1.7	1.00	101

* Primary Lamp Type

PERFORMANCE:
- Electromagnetic Reactor Type Ballast
- Preheat Start
- Series Operation
- Normal Power Factor
- Normal Ballast Factor
- Encased & Potted
- Sound Rated A
- Meets ANSI Standard C82.1 for Ballast Requirements

APPLICATION:
- Maximum Case Temperature: 194ºF/90ºC
- Maximum Ambient Temperature: 104ºF/40ºC
- Minimum Starting Temperature: -18ºF/0ºC
- Remote Mounting: 10 ft. Max. Lead Length, 18AWG

SAFETY/STANDARDS:
- UL/935 Recognized Component (Type 1 Outdoor)
- No PCB's
- RoHS Compliant

SKU INFORMATION:
- 3M10081 (Version 1 - Leads Out One End)

CASE STYLE: 7

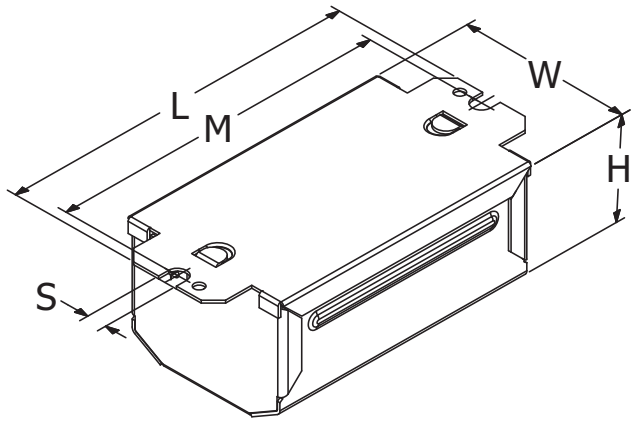

L	W	H	M	S
3	1 7/8	1 7/16	2 3/4	3/16
3.00	1.88	1.44	2.75	0.19
7.62 cm	4.78 cm	3.66 cm	6.99 cm	0.47 cm

WIRING DIAGRAM: 101

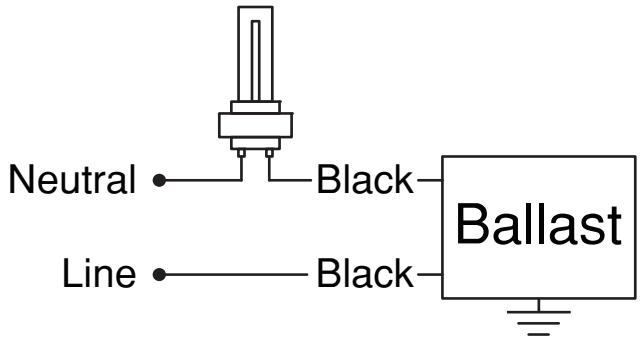

Ballast lead connections are interchangeable.

- Black: (2) 12"
  Tolerance: +1.00, -0.50"
- Strip: 0.375" ± 0.060

WARRANTY:
Robertson Worldwide warrants to the purchaser that this ballast will be free from defects in material or workmanship for a period of 2 years from date of manufacture when properly installed and under normal condition of use. For more information on Robertson Worldwide ballasts, visit www.robertsonlighting.com
Specifications subject to change without notice.