**MAGNETIC**
Normal Power Factor

# S68P

| | | | | | |
|---|---|---|---|---|---|
| Ballast Type: | Electromagnetic | Starting Method: | Preheat | Unit Weight | 0.49 lbs |
| Input Voltage: | 120VAC+5%,-10% | Lamp Connection: | Series | Carton Quantity: | 48 |
| Input Frequency: | 60 Hz. | Unit Color: | White | Skid Quantity: | 1920 |

**ELECTRICAL SPECIFICATION:**

| Line Voltage (V) | Lamp Type | Lamp Watts | No. of Lamps | Line Current (A) | Input Power (W) | Power Factor | Max Current THD (%) | Current Crest Factor | Ballast Factor | Wiring Diagram | B.E.F. |
|---|---|---|---|---|---|---|---|---|---|---|---|
| 120 | CFT7W/G23 | 7 | 1 | 0.16 | 10 | ≥0.50 | ≤15 | ≤1.7 | 0.90 | 101 | 9.00 |
| 120 | CFT9W/G23 | 9 | 1 | 0.14 | 9 | ≥0.55 | ≤15 | ≤1.7 | 0.80 | 101 | 8.89 |

**PERFORMANCE:**
- Electromagnetic reactor type ballast
- Preheat Start
- Series operation
- Normal power factor
- Encased & potted
- Sound rated A
- Meets ANSI standard C82.11-1993

**APPLICATION:**
- Maximum case temperature: 194ºF/90ºC
- Maximum ambient temperature: 104ºF/40ºC
- Minimum starting temperature: 32ºF/0ºC
- Lamp starts: >15,000 starts
- Remote mounting: 10 ft.

**SAFETY:**
- Automatic reset thermal protector
- No PCB's
- RoHS Compliant

**STYLE:**

**7**

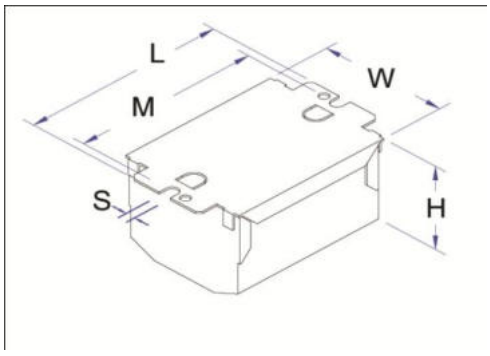


| H | W | L | M | S |
|---|---|---|---|---|
| 1 7/16 | 1 7/8 | 3 | 2 3/4 | 3/16 |
| 1.44 | 1.88 | 3.00 | 2.75 | 0.19 |
| 3.66 cm | 4.78 cm | 7.62 cm | 6.99 cm | 0.47 cm |

**WIRING DIAGRAM:**

**101**

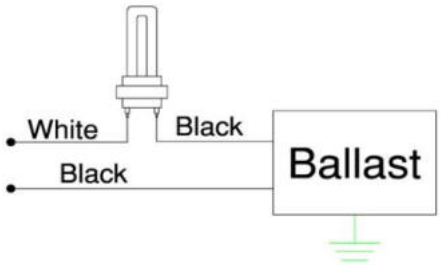


Standard lead lengths:
- Blk: (2) 6"

* 3/8" Strip

**WARRANTY**

Robertson Worldwide warrants to the purchaser that this ballast will be free from defects in material or workmanship for a period of 2 years from date of manufacture when properly installed and under normal conditions of use. For more information on Robertson Worldwide's ballasts, call 1-800-323-5633 or visit www.robertsonww.com. Specifications subject to change without notice.

Revised 12/17/10


**ROBERTSON WORLDWIDE**
13611 Thornton Rd, Blue Island, IL 60406, TEL: 1-800-323-5633, FAX: 1-877-388-2420, www.robertsonww.com