MAGNETIC
Normal Power Factor

S40BP

Ballast Type:	Electromagnetic	Starting Method:	Preheat	Unit Weight:	1.8 lb.
Input Voltage:	120VAC+5%,-10%	Lamp Connection:	N/A	Carton Quantity:	30
Input Frequency:	60 Hz.	Unit Color:	Black	Skid Quantity:	960

ELECTRICAL SPECIFICATION:

Line Voltage (V)	Lamp Type	Lamp Watts	No. of Lamps	Line Current (A)	Input Power (W)	Power Factor	Max Current THD (%)	Current Crest Factor	Ballast Factor	Wiring Diagram	B.E.F.
120	F40T12	40	1	0.62	39	≥0.52	≤10	≤1.5	0.75	002	1.92
120	F30T12	30	1	0.69	38	≥0.45	≤10	≤1.5	0.90	002	2.36
120	F30T8	30	1	0.65	39	≥0.50	≤10	≤1.5	0.95	002	2.43
120	FT36W/2G11	36	1	0.59	36	≥0.51	≤12	≤1.5	0.70	002	1.94

PERFORMANCE:
- Electromagnetic lag type ballast
- Preheat self start
- Normal power factor
- Encased & potted
- Sound rated A
- Meets ANSI standard C82.1

APPLICATION:
- Maximum case temperature: 194ºF/90ºC
- Maximum ambient temperature: 104ºF/40ºC
- Minimum starting temperature: 50ºF/10ºC
- Lamp starts: > 6,000 starts
- Remote mounting: 10 ft.

SAFETY:
- UL/935 (Class P, Type HL, Type 1 outdoor) listed
- CSA/C22.2 certified
- Automatic reset thermal protector
- No PCB's

STYLE:

9

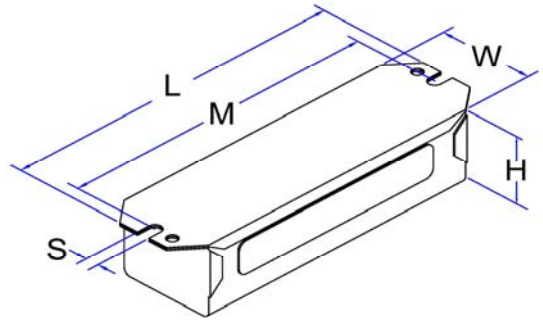

H	W	L	M	S
1 13/32	1 29/32	6 7/16	6	1/4
1.41	1.91	6.44	6.00	0.25
3.58cm	4.85cm	16.36cm	15.24cm	0.64cm

WIRING DIAGRAM:

002

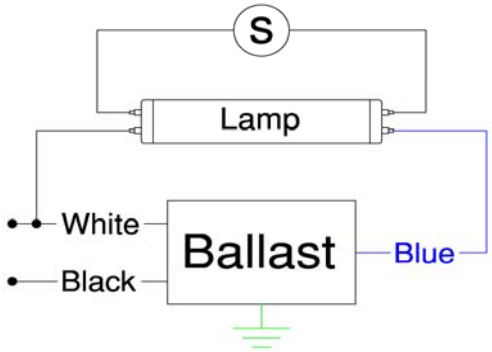

Standard lead lengths:
- Blk: 6"
- Blu: 30"
- Wht: 6"

* 3/8" Strip

WARRANTY

Robertson Worldwide warrants to the purchaser that this ballast will be free from defects in material or workmanship for a period of 2 years from date of manufacture when properly installed and under normal conditions of use. For more information on Robertson Worldwide's ballasts, call 1-800-323-5633 or visit www.robertsonww.com. Specifications subject to change without notice.

Revised 1/9/06

ROBERTSON WORLDWIDE
13611 Thornton Rd, Blue Island, IL 60406, TEL: 1-800-323-5633, FAX: 1-877-388-2420, www.robertsonww.com