MAGNETIC
Normal Power Factor

S18PSC

Ballast Type:	Electromagnetic	Starting Method:	Preheat	Unit Weight	1.3 lbs.
Input Voltage:	120VAC +5%,-10%	Lamp Connection:	Series	Carton Quantity:	42
Input Frequency:	60 Hz.	Unit Color:	Black	Skid Quantity:	1344

ELECTRICAL SPECIFICATION:

Line Voltage (V)	Lamp Type	Lamp Watts	No. of Lamps	Line Current (A)	Input Power (W)	Power Factor	Max Current THD (%)	Current Crest Factor	Ballast Factor	Wiring Diagram	B.E.F.
120	CFQ18W/G24d, CFTR18W/GX24d	18	1	0.35	23	≥0.45	≤10	≤1.6	0.90	102	3.91

PERFORMANCE:
- Electromagnetic lag type ballast
- Preheat start
- Series operation
- Normal power factor
- Encased & potted
- Sound rated A
- Meets ANSI C82.1

APPLICATION:
- Maximum case temperature: 194ºF/90ºC
- Maximum ambient temperature: 104ºF/40ºC
- Minimum starting temperature: 15ºF/-9ºC
- Remote mounting: 10 ft.

SAFETY:
- UL listed (Class P, Type HL, Type 1 outdoor)
- CSA/C22.2 certified
- Automatic reset thermal protector
- No PCB's
- RoHS Compliant

STYLE:

9A

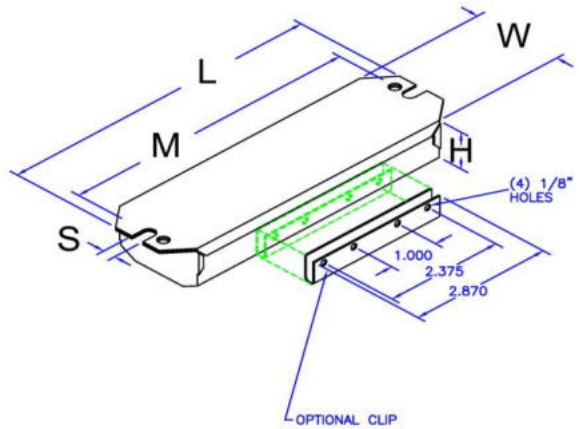

H	W	L	M	S
31/32	1 29/32	6 7/16	6	1/4
0.97	1.91	6.44	6.00	0.25
2.46 cm	4.85 cm	16.36 cm	15.24 cm	0.64 cm

WIRING DIAGRAM:

102

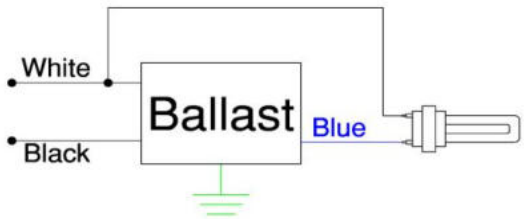

Standard lead lengths:
- Blk: 12"
- Blu: 12"
- Wht: 12"

* 3/8" Strip

WARRANTY

Robertson Worldwide warrants to the purchaser that this ballast will be free from defects in material or workmanship for a period of 2 years from date of manufacture when properly installed and under normal conditions of use. For more information on Robertson Worldwide's ballasts, call 1-800-323-5633 or visit www.robertsonww.com. Specifications subject to change without notice.

Revised 12/17/10

ROBERTSON WORLDWIDE
13611 Thornton Rd, Blue Island, IL 60406, TEL: 1-800-323-5633, FAX: 1-877-388-2420, www.robertsonww.com