MAGNETIC
Normal Power Factor

R120P

Ballast Type:	Electromagnetic	Starting Method:	Trigger Start	Unit Weight	2.1 lb.
Input Voltage:	120VAC+5%,-10%	Lamp Connection:	N/A	Carton Quantity:	30
Input Frequency:	60 Hz.	Unit Color:	Black	Skid Quantity:	960

ELECTRICAL SPECIFICATION:

Line Voltage (V)	Lamp Type	Lamp Watts	No. of Lamps	Line Current (A)	Input Power (W)	Power Factor	Max Current THD (%)	Current Crest Factor	Ballast Factor	Wiring Diagram	B.E.F.
120	F14T8	14	1	0.57	26	≥0.40	≤15	≤1.6	0.80	005	3.00
120	F15T8	15	1	0.55	23	≥0.35	≤15	≤1.7	0.90	005	3.90
120	F14T12	14	1	0.60	27	≥0.40	≤15	≤1.6	0.80	005	2.96
120	F15T12	15	1	0.57	27	≥0.40	≤15	≤1.6	0.90	005	3.33
120	F20T12	20	1	0.54	28	≥0.42	≤15	≤1.7	0.70	005	2.50

PERFORMANCE:
- Electromagnetic lag type ballast
- Trigger start
- Normal power factor
- Encased & potted
- Sound rated A
- Meets ANSI C82.1

APPLICATION:
- Maximum case temperature: 194ºF/90ºC
- Maximum ambient temperature: 104ºF/40ºC
- Minimum starting temperature: 50ºF/10ºC
- Remote mounting: 10ft.

SAFETY:
- UL listed (Class P, Type HL, Type 1 outdoor)
- CSA certified (cUL)
- Automatic reset thermal protector
- No PCB's

STYLE:

9

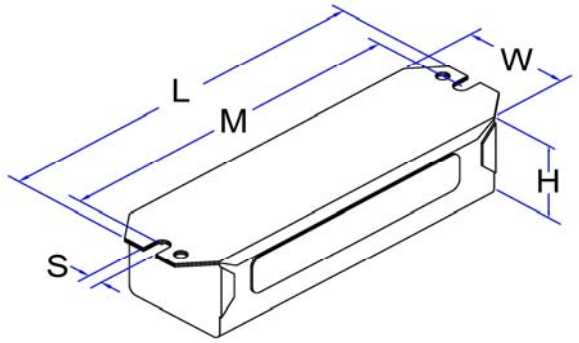

H	W	L	M	S
1 13/32	1 29/32	6 7/16	6	1/4
1.41	1.91	6.44	6.00	0.25
3.58cm	4.85cm	16.36cm	15.24cm	0.64cm

WIRING DIAGRAM:

005

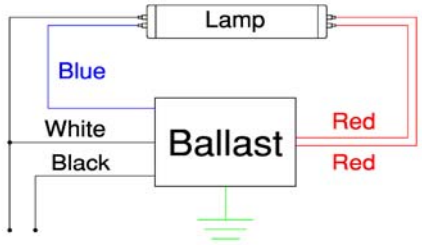

USE CIRCUIT INTERRUPTING LAMP HOLDER

Standard lead lengths:
- Blk: 10"
- Wht: 17"
- Red: 14"
- Blu: 18"

* 3/8" Strip

WARRANTY

Robertson Worldwide warrants to the purchaser that this ballast will be free from defects in material or workmanship for a period of 2 years from date of manufacture when properly installed and under normal conditions of use. For more information on Robertson Worldwide's ballasts, call 1-800-323-5633 or visit www.robertsonww.com. Specifications subject to change without notice.

Revised 1-9-06

ROBERTSON WORLDWIDE
13611 Thornton Rd, Blue Island, IL 60406, TEL: 1-800-323-5633, FAX: 1-877-388-2420, www.robertsonww.com