MAGNETIC
Normal Power Factor

R12025

Ballast Type:	Electromagnetic
Input Voltage:	220VAC+5%,-10%
Input Frequency:	50 Hz.

Starting Method:	Trigger Start
Lamp Connection:	Series
Unit Weight	3.10 lb

ELECTRICAL SPECIFICATION:

Line Voltage (V)	Lamp Type	Lamp Watts	No. of Lamps	Line Current (A)	Input Power (W)	Power Factor	Max Current THD (%)	Current Crest Factor	Ballast Factor	Wiring Diagram	B.E.F.
220	F20T12	20	1	0.36	26	≥35	≤20	≤1.7	0.90	005	3.46
220	F15T12	15	1	0.37	27	≥33	≤20	≤1.7	0.90	005	3.33
220	F15T8	15	1	0.36	26	≥33	≤20	≤1.7	0.90	005	3.46

PERFORMANCE:
- Electromagnetic lag type ballast
- Series operation
- Normal power factor
- Trigger start
- Sound rated A
- Encased & potted
- Meets ANSI C82.1

APPLICATION:
- Maximum case temperature: 194ºF/90ºC
- Maximum ambient temperature: 104ºF/40ºC
- Minimum starting temperature: 50ºF/10ºC
- Remote mounting: 10ft.

SAFETY:
- Automatic reset thermal protector
- No PCB's

STYLE:

10

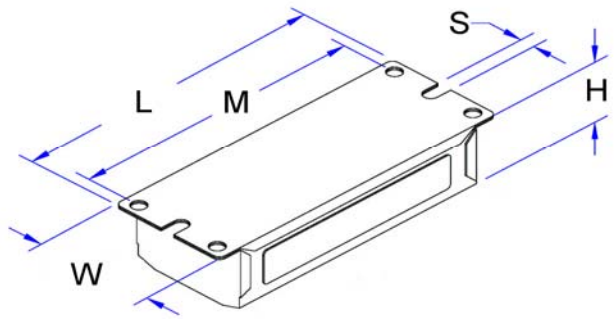

H	W	L	M	S
1 11/16	2 3/8	6 9/16	6	5/16
1.69	2.38	6.56	6.00	0.31
2.71 cm	6.03 cm	16.66 cm	15.24 cm	0.79 cm

WIRING DIAGRAM:

005

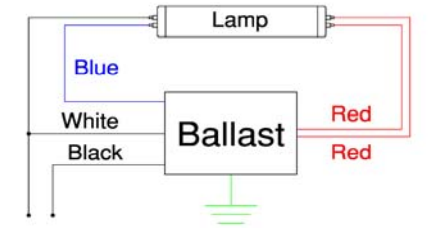

Standard lead lengths:
- Blk: 10"
- Wht: 17"
- Red: 2 @ 14"
- Blu: 18"

* 3/8" Strip

WARRANTY

Robertson Worldwide warrants to the purchaser that this ballast will be free from defects in material or workmanship for a period of 2 years from date of manufacture when properly installed and under normal conditions of use. For more information on Robertson Worldwide's ballasts, call 1-800-323-5633 or visit www.robertsonww.com. Specifications subject to change without notice.

Revised 12/27/04

ROBERTSON WORLDWIDE
13611 Thornton Rd, Blue Island, IL 60406, TEL: 1-800-323-5633, FAX: 1-877-388-2420, www.robertsonww.com