PSU228T5120

Ballast Type:	Electronic
Input Voltage:	120 VAC ± 10%
Input Frequency:	60Hz.

Starting Method:	Programmed Start
Lamp Connection:	Parallel
Unit Color:	White
Unit Weight:	0.73 lbs.

SKU & Packaging	Quantity
1P20210 (Non-Wrapped)	20
2P20210 (Shrink-Wrapped)	10
3P20210 (Shrink-Wrapped)	1

ELECTRICAL SPECIFICATIONS:

Line Voltage(V)	Lamp Type	Lamp Watts	No. of Lamps	Line Current(A)	Input Power(W)	Power Factor	Max Current THD(%)	Current Crest Factor	Ballast Factor	B.E.F.
120	* F28T5	28	2	0.96	62	0.50	140	1.7	0.92	1.48
120	F21T5	21	2	0.78	47	0.50	160	1.7	0.95	2.02
120	F14T5	14	2	0.62	35	0.47	170	1.7	1.00	2.85
120	F32T8	32	2	0.87	54	0.50	150	1.7	0.88	1.62

PERFORMANCE:
- Electronic ballast
- Program start
- Parallel operation
- Normal power factor
- Encased & potted
- Sound Rated A
- Meets FCC Part 18 (Class B) for EMI
- Meets DoE Consumer Limits
- Meets ANSI standard C62.41

APPLICATION:
- Maximum case temperature: 167ºF/75ºC
- Maximum ambient temperature: 131ºF/55ºC
- Minimum starting temperature:
- Remote mounting: 18 ft. max. lead length, 18AWG

SAFETY/ STANDARDS:
- UL/cUL (Class P,Type HL,Type 1 Outdoor)
- Inherent Thermal Protection
- No PCB's
- RoHS Compliant
- OCV: 300V

CASE STYLE: 3B

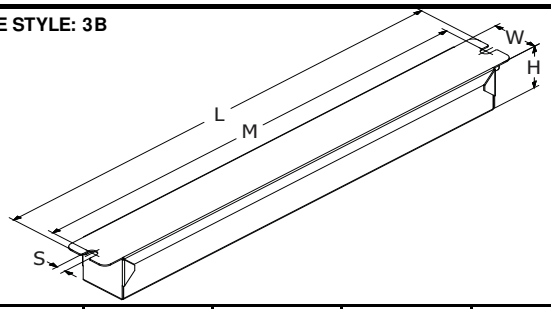

L	W	H	S	M
9	7/8	7/8	3/16	3/16
9.00	0.90	0.90	0.17	0.19
22.86 cm	2.29 cm	2.29 cm	0.43 cm	0.48 cm

WIRING DIAGRAM: 059

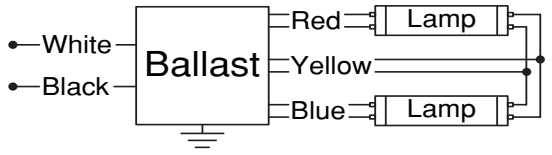

- Black: 25"
- White: 25"
- Red: (2) 26"
- Blue: (2) 26"
- Yellow: (2) 38"

* Strip: 3/8"

HOT SPOT LOCATION: (Top Label Side of Ballast)

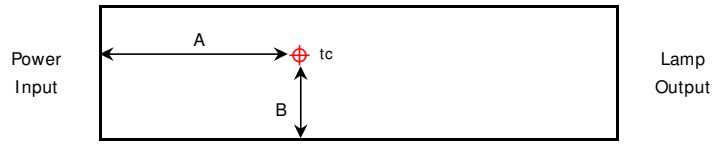

A= 1.38"

B= 0.59"

WARRANTY:

Robertson Worldwide warrants to the purchaser that this LED driver will be free from defects in material or workmanship for a period of 2 years from date of manufacture when properly installed and under normal condition of use. For more information on Robertson Worldwide ballasts, call 1-800-323-5633 or Visit www.robertsonww.com. specifications subject to change without notice.