MAGNETIC
Normal Power Factor

NES215P

Ballast Type:	Electromagnetic
Input Voltage:	120VAC+5%,-10%
Input Frequency:	60 Hz.

Starting Method:	Electronic start
Lamp Connection:	Parallel
Unit Weight	1.91 lbs

ELECTRICAL SPECIFICATION:

Line Voltage (V)	Lamp Type	Lamp Watts	No. of Lamps	Line Current (A)	Input Power (W)	Power Factor	Max Current THD (%)	Current Crest Factor	Ballast Factor	Wiring Diagram	B.E.F.
120	F15T8	15	2	0.70	35	≥0.42	≤15	≤1.7	1.00	019	2.86
120	F15T12	15	2	0.70	35	≥0.42	≤15	≤1.7	0.90	019	2.57

PERFORMANCE:
- Electromagnetic reactor type ballast
- Electronic program start
- Parallel operation
- Normal power factor
- Sound rated A
- Encased & potted
- Meets ANSI C82.1
- End of lamp life protection

APPLICATION:
- Maximum case temperature: 194ºF/90ºC
- Maximum ambient temperature: 104ºF/40ºC
- Minimum starting temperature: 0ºF/-18ºC
- Lamp starts: > 50,000 starts
- Remote mounting: 10ft.

SAFETY:
- UL/935 (Class P, Type HL, Type 1 outdoor) listed
- CSA/C22.2 Certified
- Automatic reset thermal protector
- No PCB's

STYLE:

9

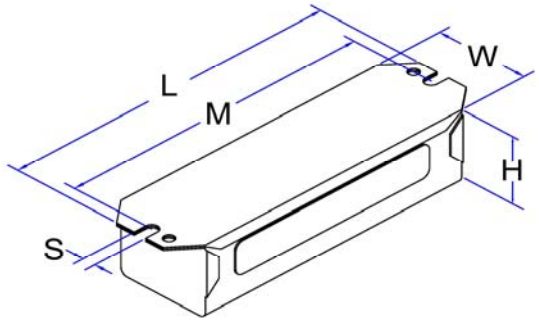

H	W	L	M	S
1 5/32	1 29/32	6 7/16	6	1/4
1.47	1.91	6.44	6.00	0.25
3.73 cm	4.85 cm	16.36 cm	15.24 cm	0.64 cm

WIRING DIAGRAM:

019

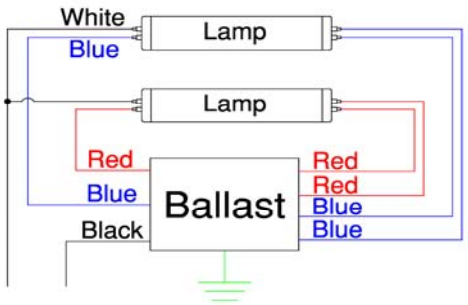

Standard lead lengths:
- Blk:15"
- Red: (3) 15"
- Blu: (3) 15"

* 3/8" Strip

WARRANTY

Robertson Worldwide warrants to the purchaser that this ballast will be free from defects in material or workmanship for a period of 3 years from date of manufacture when properly installed and under normal conditions of use. For more information on Robertson Worldwide's ballasts, call 1-800-323-5633 or visit www.robertsonww.com. Specifications subject to change without notice.

Revised 1/6/05

ROBERTSON WORLDWIDE
13611 Thornton Rd, Blue Island, IL 60406, TEL: 1-800-323-5633, FAX: 1-877-388-2420, www.robertsonww.com