MAGNETIC
Normal Power Factor

L15ARC

Ballast Type:	Electromagnetic	Starting Method:	Preheat	Unit Weight	0.60 lb
Input Voltage:	120VAC+5%,-10%	Lamp Connection:	Series	Carton Quantity:	55
Input Frequency:	60 Hz.	Unit Color:	Black	Skid Quantity:	2640

ELECTRICAL SPECIFICATION:

Line Voltage (V)	Lamp Type	Lamp Watts	No. of Lamps	Line Current (A)	Input Power (W)	Power Factor	Max Current THD (%)	Current Crest Factor	Ballast Factor	Wiring Diagram	B.E.F.
120	F15T8	15	1	0.32	21	≥0.54	≤15	≤1.7	1.05	001	5.00
120	F15T12	15	1	0.31	22	≥0.57	≤15	≤1.7	0.95	001	4.32
120	F20T12	20	1	0.28	21	≥0.60	≤15	≤1.7	0.74	001	3.52
120	CFQ13W/GX23, CFT13W/GX23	13	1	0.31	21	≥0.54	≤15	≤1.7	1.09	001	5.19

PERFORMANCE:
- Electromagnetic reactor type ballast
- Preheat start
- Series operation
- Normal power factor
- Encased and potted
- Sound rated C
- Meets ANSI C82.1

APPLICATION:
- Maximum case temperature: 194ºF/90ºC
- Maximum ambient temperature: 104ºF/40ºC
- Minimum starting temperature CFL: 32ºF/0ºC
- Minimum starting temperature Linear: 50ºF/10ºC
- Remote mounting: 10ft.

SAFETY:
- UL/935 (Type 1 outdoor) recognized component
- CSA/C22.2 certified
- No PCB's

STYLE:

3

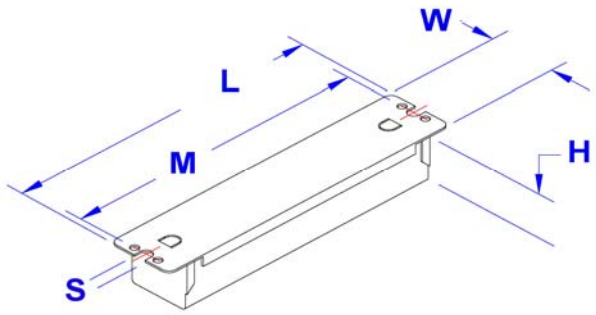

H	W	L	M	S
29/32	1 5/32	5 1/4	5	3/16
0.91	1.16	5.25	5.00	0.19
2.31 cm	2.95 cm	13.34 cm	12.70 cm	0.47 cm

WIRING DIAGRAM:

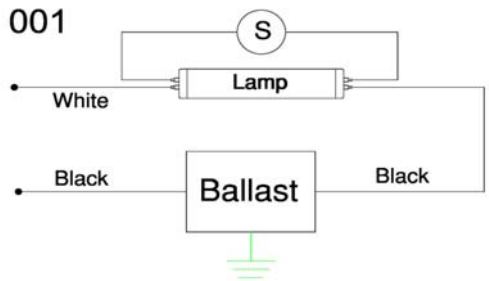

Standard lead lengths:
- Blk: 6" x 18"

* 3/8" Strip

WARRANTY

Robertson Worldwide warrants to the purchaser that this ballast will be free from defects in material or workmanship for a period of 2 years from date of manufacture when properly installed and under normal conditions of use. For more information on Robertson Worldwide's ballasts, call 1-800-323-5633 or visit www.robertsonww.com. Specifications subject to change without notice.

Revised 7/27/06

ROBERTSON WORLDWIDE
13611 Thornton Rd, Blue Island, IL 60406, TEL: 1-800-323-5633, FAX: 1-877-388-2420, www.robertsonww.com