MAGNETIC
High Power Factor

HPNS1P • HPNS1PBLS

Ballast Type:	Electromagnetic	Starting Method:	Preheat	Unit Weight:	0.80 lb.
Input Voltage:	120VAC +5%,-10%	Lamp Connection:	Series	Carton Quantity:	48/
Input Frequency:	60 Hz.	Unit Color:	White	Skid Quantity:	1920/

ELECTRICAL SPECIFICATION:

Line Voltage (V)	Lamp Type	Lamp Watts	No. of Lamps	Line Current (A)	Input Power (W)	Power Factor	Max Current THD (%)	Current Crest Factor	Ballast Factor	Wiring Diagram	B.E.F.
120	CFT13W/GX23, CFQ13W/GX23	13	1	0.13	15	≥0.94	≤10	≤1.7	0.88	102	5.87

PERFORMANCE:
- Electromagnetic reactor type ballast
- Preheat start
- Series operation
- High power factor
- Encased & potted
- Sound rated A
- Meets ANSI standard C82.1

APPLICATION:
- Maximum case temperature: 194ºF/90ºC
- Maximum ambient temperature: 104ºF/40ºC
- Minimum starting temperature: 32ºF/0ºC
- Remote mounting: 10ft.

SAFETY:
- UL listed (Class P, Type HL, Type 1 outdoor)
- CSA certified (cUL)
- Automatic reset thermal protector
- No PCB's

STYLE:

7F

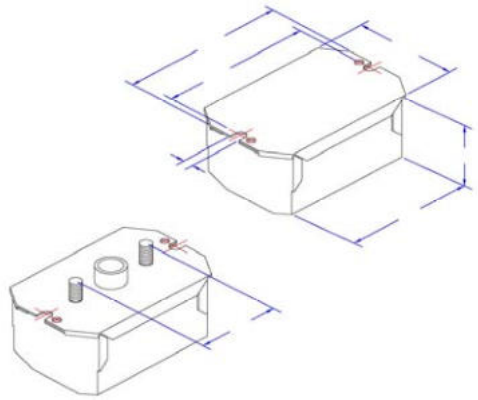

H	W	L	M	S
1 13/32	1 7/8	3 1/4	2 3/4	7/32
1.41	1.88	3.25	2.75	0.22
3.58	4.78cm	8.25	6.99cm	0.56cm

WIRING DIAGRAM:

102

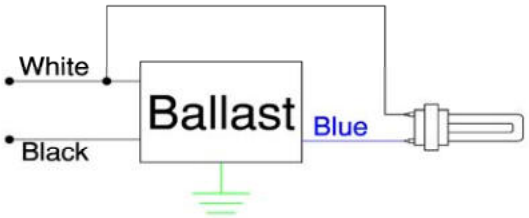

Standard lead lengths:
- Blk: 12"
- Blu: 12"
- Wht: 12"

Available in:
- Side lead

* 3/8" Strip

WARRANTY

Robertson Worldwide warrants to the purchaser that this ballast will be free from defects in material or workmanship for a period of 2 years from date of manufacture when properly installed and under normal conditions of use. For more information on Robertson Worldwide's ballasts, call 1-800-323-5633 or visit www.robertsonww.com. Specifications subject to change without notice.

Revised 3/8/06

ROBERTSON WORLDWIDE
13611 Thornton Rd, Blue Island, IL 60406, TEL: 1-800-323-5633, FAX: 1-877-388-2420, www.robertsonww.com