MAGNETIC
High Power Factor

HPN213P • HPN213PBLS

Ballast Type:	Electromagnetic	Starting Method:	Preheat	Unit Weight:	1.20 lb
Input Voltage:	120VAC+5%,-10%	Lamp Connection:	Parallel	Carton Quantity:	30
Input Frequency:	60 Hz.	Unit Color:	White	Skid Quantity:	1440

ELECTRICAL SPECIFICATION:

Line Voltage (V)	Lamp Type	Lamp Watts	No. of Lamps	Line Current (A)	Input Power (W)	Power Factor	Max Current THD (%)	Current Crest Factor	Ballast Factor	Wiring Diagram	B.E.F.
120	CFT13W/GX23, CFQ13W/GX23	13	2	0.25	30	≥0.95	≤30	≤1.7	0.90	110	3.00

PERFORMANCE:
- Electromagnetic reactor type ballast
- Preheat start
- Parallel operation
- High power factor
- Encased & potted
- Sound rated A
- Meets ANSI standard C82.1

APPLICATION:
- Maximum case temperature: 194ºF/90ºC
- Maximum ambient temperature: 104ºF/40ºC
- Minimum starting temperature: 32ºF/0ºC
- Remote mounting:10ft.

SAFETY:
- UL/935 (Class P, Type HL, Type 1 outdoor)
- CSA (cUL) certified
- Automatic reset thermal protector
- No PCB's

STYLE:

8

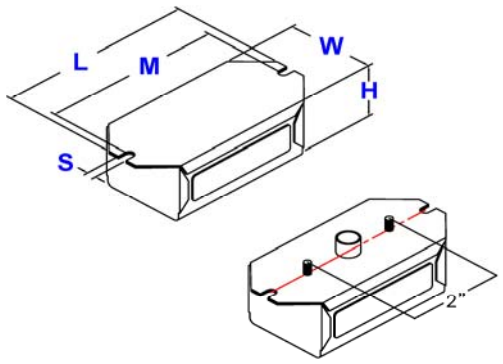

H	W	L	M	S
1 5/8	2 3/16	4 3/4	4 3/8	7/32
1.63	2.19	4.75	4.38	0.22
4.14 cm	5.56 cm	12.07 cm	11.13 cm	0.56 cm

WIRING DIAGRAM:

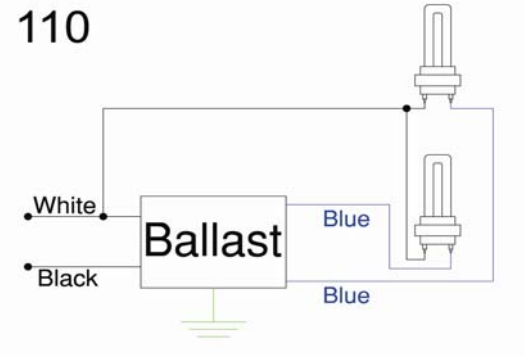

Standard lead lengths:
- Blk: 15" • Blu: 15" • Wht: 15"
- Bottom Entry/Stud - HPN213PBLS
- Blk: 8" • Blu: 8" • Wht: 8"

* 3/8" Strip

WARRANTY

Robertson Worldwide warrants to the purchaser that this ballast will be free from defects in material or workmanship for a period of 2 years from date of manufacture when properly installed and under normal conditions of use. For more information on Robertson Worldwide's ballasts, call 1-800-323-5633 or visit www.robertsonww.com. Specifications subject to change without notice.

Revised 3/1207

ROBERTSON WORLDWIDE
13611 Thornton Rd, Blue Island, IL 60406, TEL: 1-800-323-5633, FAX: 1-877-388-2420, www.robertsonww.com