MAGNETIC
High Power Factor

ES240120TP

Ballast Type:	Electromagnetic	Starting Method:	Rapid Start	Unit Weight:	3.4 lb.
Input Voltage:	120VAC +5%,-10%	Lamp Connection:	Series	Carton Quantity:	10
Input Frequency:	60 Hz.	Unit Color:	Black	Skid Quantity:	540

ELECTRICAL SPECIFICATION:

Line Voltage (V)	Lamp Type	Lamp Watts	No. of Lamps	Line Current (A)	Input Power (W)	Power Factor	Max Current THD (%)	Current Crest Factor	Ballast Factor	Wiring Diagram	B.E. F.
120	F40T10	40	2	0.73	87	≥0.98	≤20	≤1.6	0.95	015	1.09
120	F40T12	40	2	0.73	87	≥0.98	≤20	≤1.6	0.95	015	1.09
120	F40T12ES	34	2	0.64	73	≥0.95	≤20	≤1.7	0.89	015	1.22

PERFORMANCE:
- Electromagnetic lead type ballast
- Rapid start
- Series operation
- High power factor
- Encased & potted
- Sound rated A
- Meets Public law 100-357
- Meets CSA Standard 654
- Meets ANSI C82.1

APPLICATION:
- Maximum case temperature: 194ºF/90ºC
- Maximum ambient temperature: 104ºF/40ºC
- Minimum starting temperature: 50ºF/10ºC
- Minimum starting temperature for ES lamps: 60ºF/16ºC
- Remote mounting: 10ft.

SAFETY:
- UL listed (Class P, Type HL, Type 1 outdoor)
- CSA certified
- Automatic reset thermal protector
- No PCB's

STYLE:

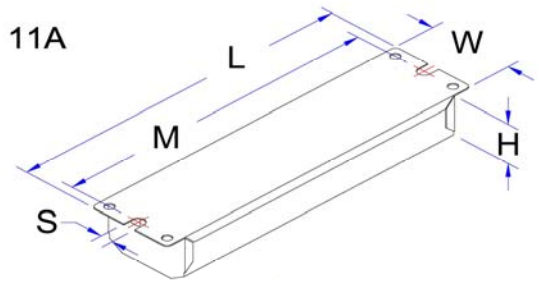

H	W	L	M	S
1 1/2	2 3/8	9 7/16	8 7/8	5/16
1.50	2.38	9.44	8.88	0.31
3.81 cm	6.03 cm	23.98 cm	22.56 cm	0.79 cm

WIRING DIAGRAM:

15

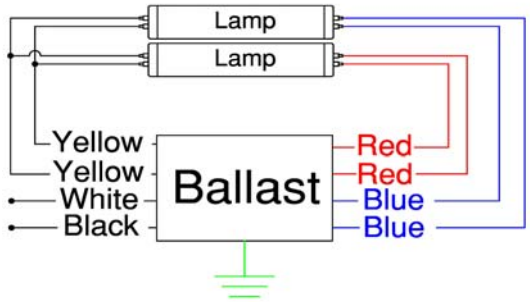

Standard lead lengths:
- Blk: 22"
- Wht: 22"
- Red: 26"
- Blu: 26"
- Yel: 37"

* 3/8" Strip

WARRANTY

Robertson Worldwide warrants to the purchaser that this ballast will be free from defects in material or workmanship for a period of 2 years from date of manufacture when properly installed and under normal conditions of use. For more information on Robertson Worldwide's ballasts, call 1-800-323-5633 or visit www.robertsonww.com. Specifications subject to change without notice.

Revised 3/16/07

ROBERTSON WORLDWIDE
13611 Thornton Rd, Blue Island, IL 60406, TEL: 1-800-323-5633, FAX: 1-877-388-2420, www.robertsonww.com