MAGNETIC
Normal Power Factor

O8

Ballast Type:	Electromagnetic	Starting Method:	Preheat	Unit Weight	0.30 lb.
Input Voltage:	120VAC+5%,-10%	Lamp Connection:	N/A	Carton Quantity:	72
Input Frequency:	60 Hz.	Unit Color:	Raw	Skid Quantity:	5760

ELECTRICAL SPECIFICATION:

Line Voltage (V)	Lamp Type	Lamp Watts	No. of Lamps	Line Current (A)	Input Power (W)	Power Factor	Max Current THD (%)	Current Crest Factor	Ballast Factor	Wiring Diagram	B.E.F.
120	F6T5	6	1	0.18	10	≥0.49	≤15	≤1.7	1.10	001	11.00
120	F8T5	8	1	0.16	10	≥0.54	≤15	≤1.7	1.10	001	11.00

PERFORMANCE:
- Electromagnetic reactor type ballast
- Preheat start
- Normal power factor
- Open core and coil
- Sound rated A
- Meets ANSI C82.1

APPLICATION:
- Maximum case temperature: 194ºF/90ºC
- Maximum ambient temperature: 104ºF/40ºC
- Minimum starting temperature Linear: 50ºF/10ºC
- Remote mounting: 10ft.

SAFETY:
- UL/935 (Type 1 outdoor) listed
- CSA certified (cUL)
- No PCB's

STYLE:

1R

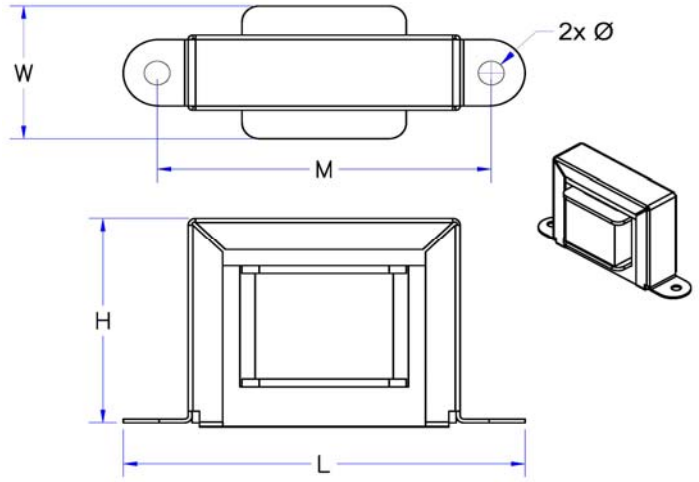

H	W	L	M	Ø
1 3/8	1 1/32	2 3/8	2	3/16
1.38	1.03	2.38	2.00	0.19
3.49cm	2.62cm	6.03cm	5.08cm	0.47cm

WIRING DIAGRAM:

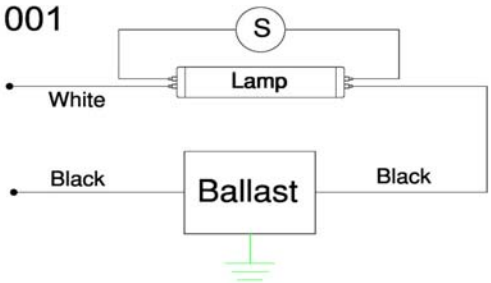

Standard lead length:
- Black 8 x 8"

* 3/8" Strip

Robertson Worldwide warrants to the purchaser that this ballast will be free from defects in material or workmanship for a period of 2 years from date of manufacture when properly installed and under normal conditions of use. For more information on Robertson Worldwide's ballasts, call 1-800-323-5633 or visit www.robertsonww.com. Specifications subject to change without notice.

Revised 1/6/05

ROBERTSON WORLDWIDE
13611 Thornton Rd, Blue Island, IL 60406, TEL: 1-800-323-5633, FAX: 1-877-388-2420, www.robertsonww.com