Robertson WORLDWIDE®
INNOVATIVE LIGHTING SOLUTIONS

O683PB1

Ballast Type:	Electromagnetic	Starting Method:	Preheat Start	Unit Color:	Raw
Input Voltage:	120VAC +5%, -10%	Lamp Connection:	Series	Unit Weight:	0.28 lbs.
Input Frequency:	60Hz				

ELECTRICAL SPECIFICATIONS:

Line Voltage (V)	Lamp Type	Lamp Watts	No. of Lamps	Line Current (A)	Input Power (W)	Power Factor	Max Current THD (%)	Current Crest Factor	Ballast Factor	Wiring Diagram
120	CFT9W/G23	9	1	0.14	9	≥ 0.55	≤ 15	≤ 1.6	0.80	101

PERFORMANCE:
- Electromagnetic Reactor Type Ballast
- Preheat Start
- Series Operation
- Normal Power Factor
- Normal Ballast Factor
- Open Core & Coil
- Sound Rated A
- Meets ANSI Standard C82.1 for Ballast Requirements

APPLICATION:
- Maximum Case Temperature: 194ºF/90ºC
- Maximum Ambient Temperature: 104ºF/40ºC
- Minimum Starting Temperature: 0ºF/-18ºC
- Remote Mounting: 10 ft. Max. Lead Length, 18AWG
- Class B Insulation System: 130ºC

SAFETY/STANDARDS:
- UL/935 Listed (Class P, Type 1 Outdoor)
- CSA/C22.2 Certified
- No PCB's
- Auto Reset Thermal Protection
- RoHS Compliant

SKU INFORMATION:
- 3M10571 (Version 1 - Leads Out One End)

CASE STYLE: 1F

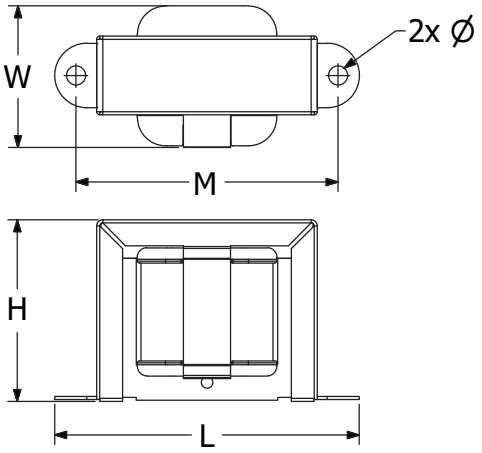

L	W	H	M	Ø
2 1/8	1 1/8	1 3/16	1 13/16	3/16
2.13	1.13	1.19	1.81	0.19
5.41 cm	2.87 cm	3.02 cm	4.60 cm	0.47 cm

WIRING DIAGRAM: 101

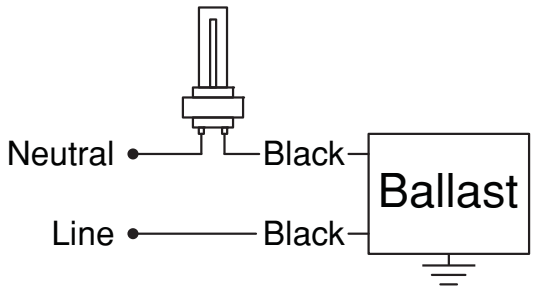

Ballast lead connections are interchangeable.
- Black: 7"
- Black: 12"
  Tolerance: +1.00, -0.50"
- Strip: 0.375" ± 0.060

WARRANTY:
Robertson Worldwide warrants to the purchaser that this ballast will be free from defects in material or workmanship for a period of 2 years from date of manufacture when properly installed and under normal condition of use. For more information on Robertson Worldwide ballasts, visit www.robertsonlighting.com
Specifications subject to change without notice.