MAGNETIC
Normal Power Factor

O683P

Ballast Type:	Electromagnetic	Starting Method:	Preheat	Unit Weight:	0.28 lb.
Input Voltage:	120VAC+5%,-10%	Lamp Connection:	Series	Carton Quanity:	80
Input Frequency:	60 Hz.	Unit Color:	Raw	Skid Quantity:	4800

ELECTRICAL SPECIFICATION:

Line Voltage (V)	Lamp Type	Lamp Watts	No. of Lamps	Line Current (A)	Input Power (W)	Power Factor	Max Current THD (%)	Current Crest Factor	Ballast Factor	Wiring Diagram	B.E.F.
120	CFT7W/G23	7	1	0.17	10	≥0.48	≤15	≤1.6	0.95	101	9.50
120	CFT9W/G23	9	1	0.14	9	≥0.55	≤15	≤1.6	0.80	101	8.89
120	CFQ9W/G23	9	1	0.14	9	≥0.55	≤15	≤1.6	0.80	101	8.89
120	F6T5	6	1	0.17	10	≥0.47	≤15	≤1.6	1.05	001	10.50
120	F8T5	8	1	0.15	9	≥0.52	≤15	≤1.6	1.03	001	11.44

PERFORMANCE:
- Electromagnetic reactor type ballast
- Preheat start
- Series operation
- Normal power factor
- Open core and coil
- Sound rated A
- Meets ANSI C82.1

APPLICATION:
- Maximum case temperature: 194ºF/90ºC
- Maximum ambient temperature: 104ºF/40ºC
- Minimum starting temperature CFL: 0ºF/-18ºC
- Minimum starting temperature Linear: 50ºF/10ºC
- Remote mounting:10 ft.

SAFETY:
- UL/935 (Class P, Type 1 outdoor) listed
- CSA/C22.2 certified
- Automatic reset thermal protector
- No PCB's

STYLE:

1F

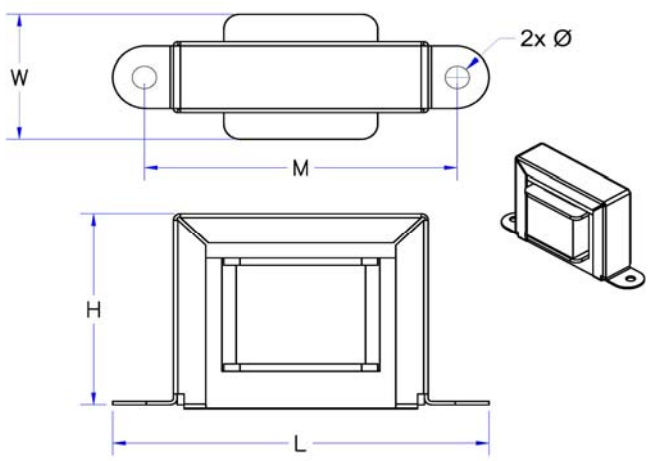

H	W	L	M	Ø
1 3/16	1 1/8	2 1/8	1 13/16	3/16
1.19	1.13	2.13	1.81	0.19
3.02 cm	2.87 cm	5.41 cm	4.60 cm	0.47 cm

WIRING DIAGRAM:

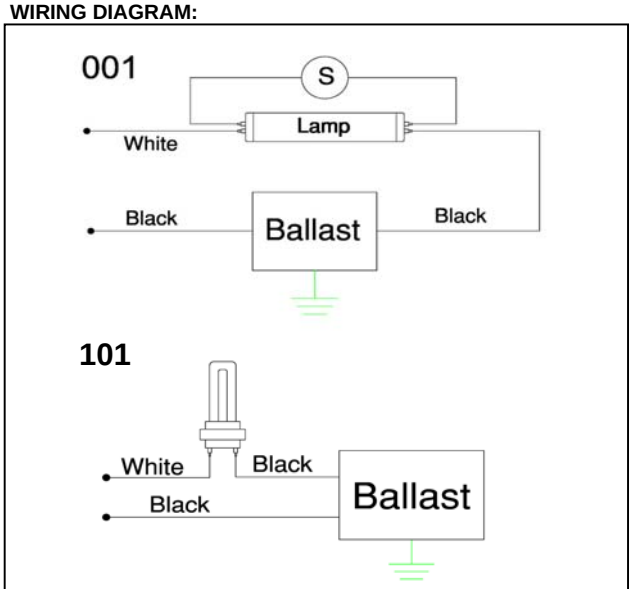

Standard lead lengths:
- Blk: 8 x 8 "

* 3/8" Strip

WARRANTY

Robertson Worldwide warrants to the purchaser that this ballast will be free from defects in material or workmanship for a period of 2 years from date of manufacture when properly installed and under normal conditions of use. For more information on Robertson Worldwide's ballasts, call 1-800-323-5633 or visit www.robertsonww.com. Specifications subject to change without notice.

Revised 10-04-05

ROBERTSON WORLDWIDE
13611 Thornton Rd, Blue Island, IL 60406, TEL: 1-800-323-5633, FAX: 1-877-388-2420, www.robertsonww.com