MAGNETIC
Normal Power Factor

O4827

Ballast Type:	Electromagnetic	Starting Method:	Preheat	Unit Weight	0.6 lb.
Input Voltage:	277VAC+5%,-10%	Lamp Connection:	Series	Carton Quantity:	60
Input Frequency:	60 Hz.	Unit Color:	Raw	Skid Quantity:	3000

ELECTRICAL SPECIFICATION:

Line Voltage (V)	Lamp Type	Lamp Watts	No. of Lamps	Line Current (A)	Input Power (W)	Power Factor	Max Current THD (%)	Current Crest Factor	Ballast Factor	Wiring Diagram	B.E.F.
277	F4T5	4	1	0.16	8	≥0.40	≤15	≤1.7	0.95	001	11.88
277	F6T5	6	1	0.15	9	≥0.45	≤15	≤1.7	0.95	001	10.00
277	F8T5	8	1	0.14	9	≥0.50	≤15	≤1.7	1.00	001	9.10

PERFORMANCE:
- Electromagnetic reactor type ballast
- Preheat start
- Series operation
- Normal power factor
- Open core and coil
- Sound rated A
- Meets ANSI C82.1

APPLICATION:
- Maximum case temperature: 194ºF/90ºC
- Maximum ambient temperature: 104ºF/40ºC
- Minimum starting temperature Linear: 50ºF/10ºC
- Remote mounting: 10ft.

SAFETY:
- UL/935 (Type 1 outdoor) listed
- No PCB's
- RoHS Compliant

STYLE:

01

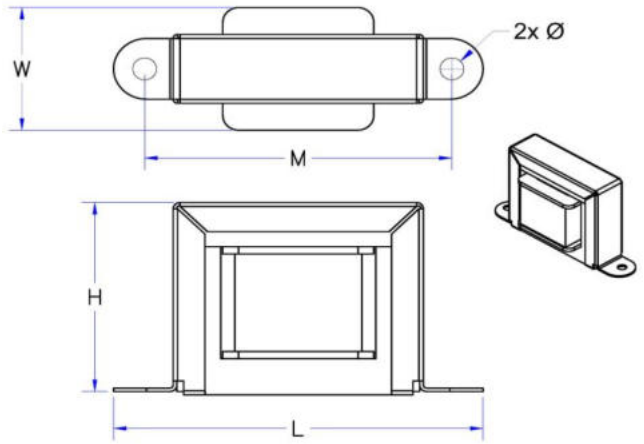

H	W	L	M	Ø
1 5/8	1 9/32	2 13/16	2 3/8	3/16
1.63	1.28	2.81	2.38	0.19
4.13 cm	3.18 cm	7.14 cm	6.03 cm	0.47 cm

WIRING DIAGRAM:

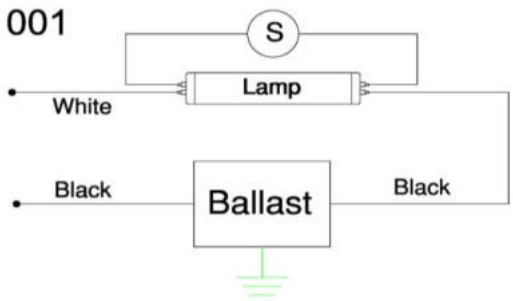

Standard lead lengths:
- Blk: 7 x 7"

* 3/8" Strip

WARRANTY

Robertson Worldwide warrants to the purchaser that this ballast will be free from defects in material or workmanship for a period of 2 years from date of manufacture when properly installed and under normal conditions of use. For more information on Robertson Worldwide's ballasts, call 1-800-323-5633 or visit www.robertsonww.com. Specifications subject to change without notice.

Revised 12/17/10

ROBERTSON WORLDWIDE
13611 Thornton Rd, Blue Island, IL 60406, TEL: 1-800-323-5633, FAX: 1-877-388-2420, www.robertsonww.com